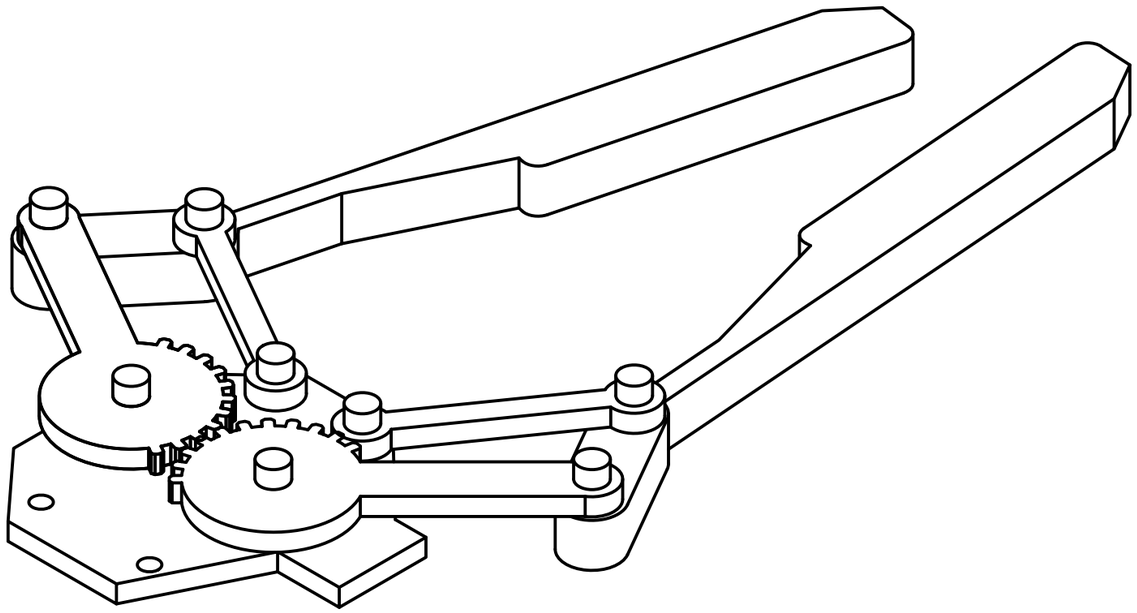

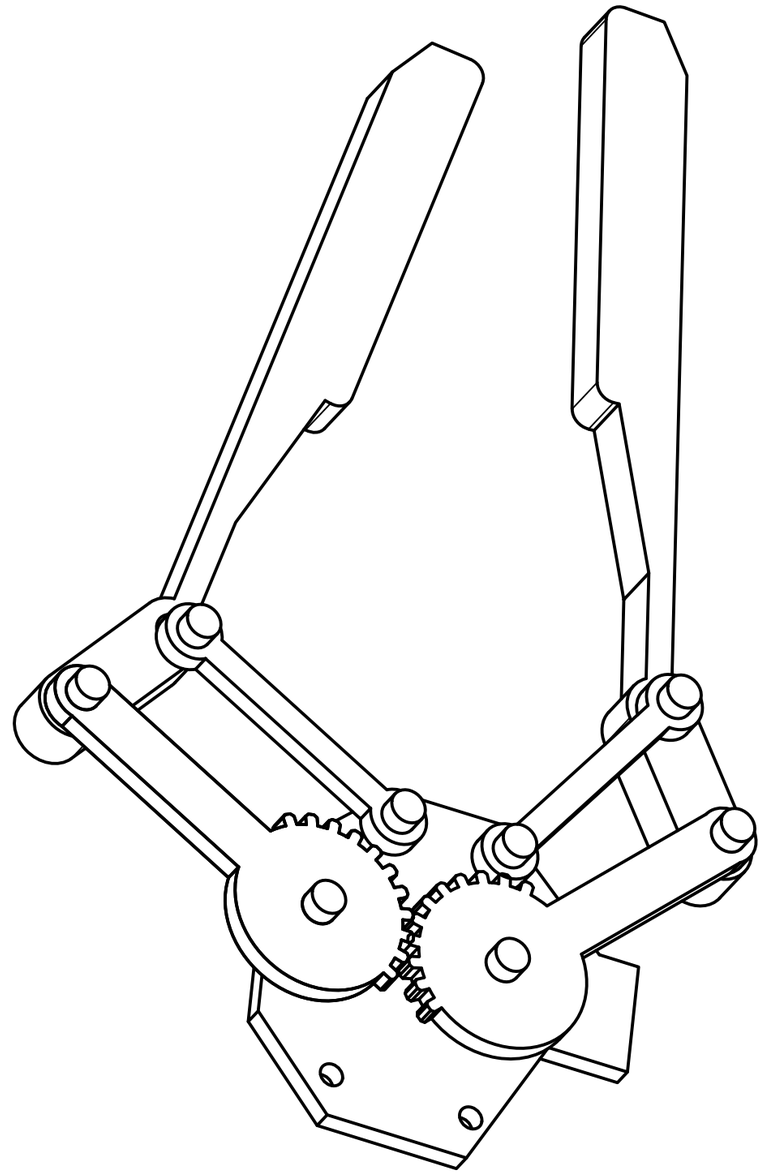

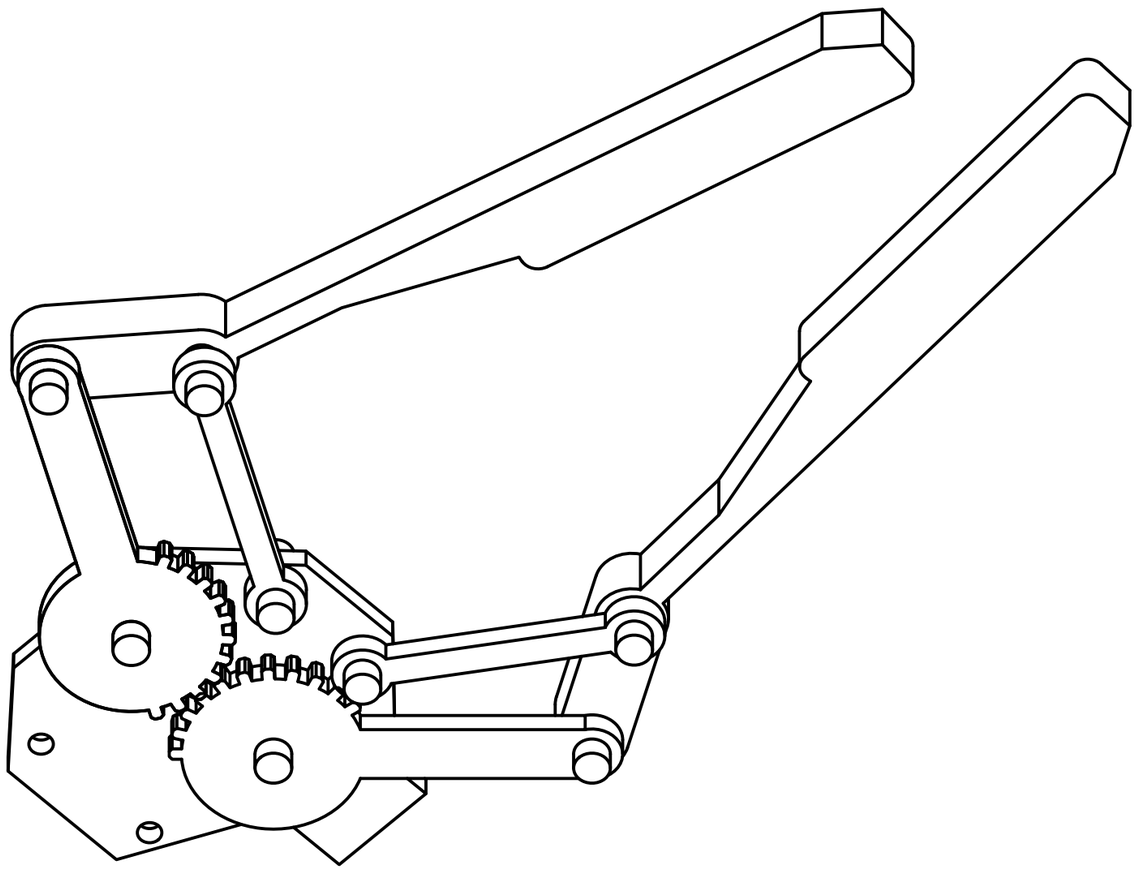

Dept.	Technical reference	Created by	Approved by
AIDS	212225230108	IYYAPPAN S 12-03-2026	
		Document type	Document status
		Title EXP-6.1	DWG No.
			Rev. / Date of issue / Sheet 1/7

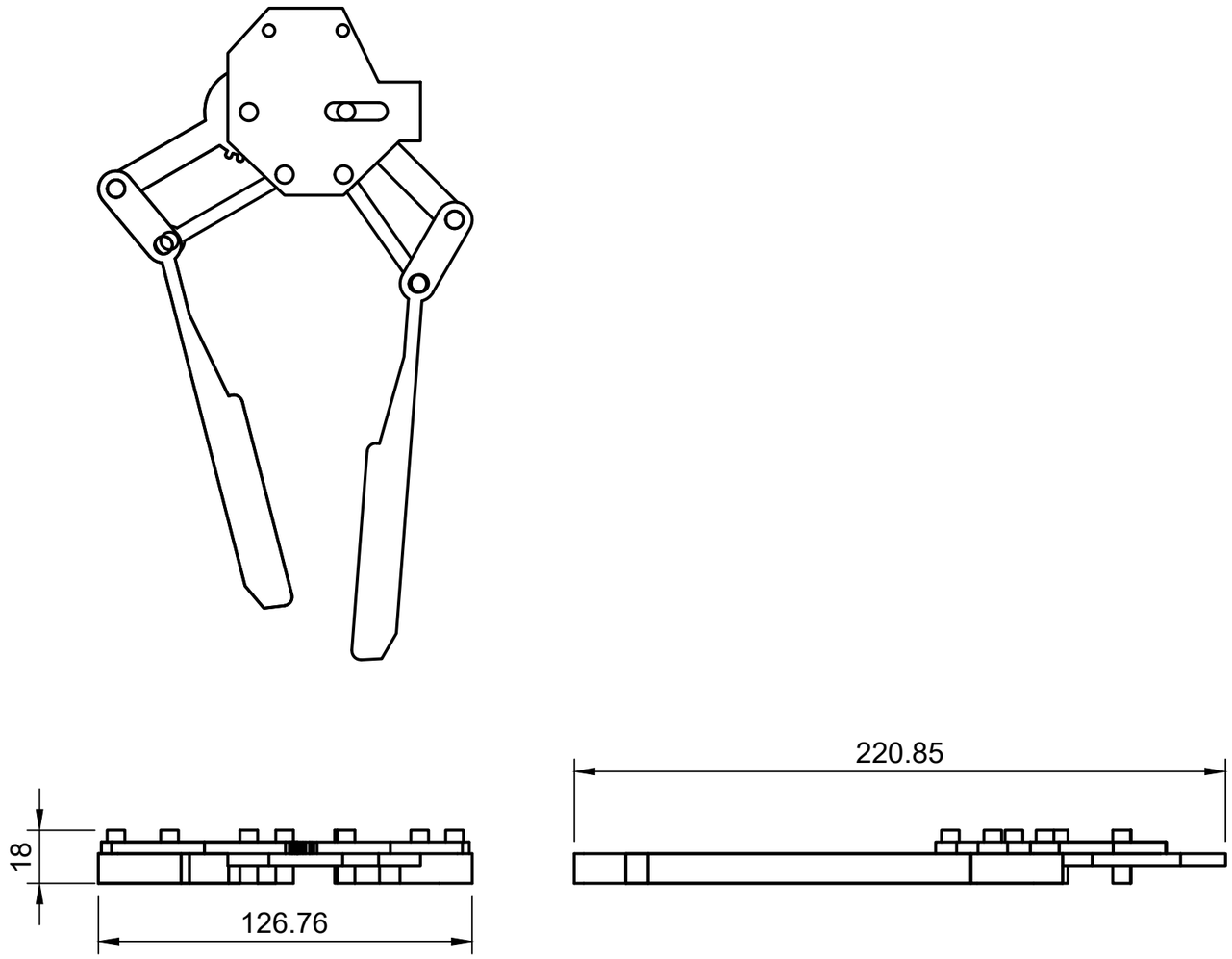

Dept.	Technical reference	Created by	Approved by
		IYYAPPAN S 12-03-2026	
		Document type	Document status
		Title EXP-6.1	DWG No.
			Rev. / Date of issue / Sheet 2/7

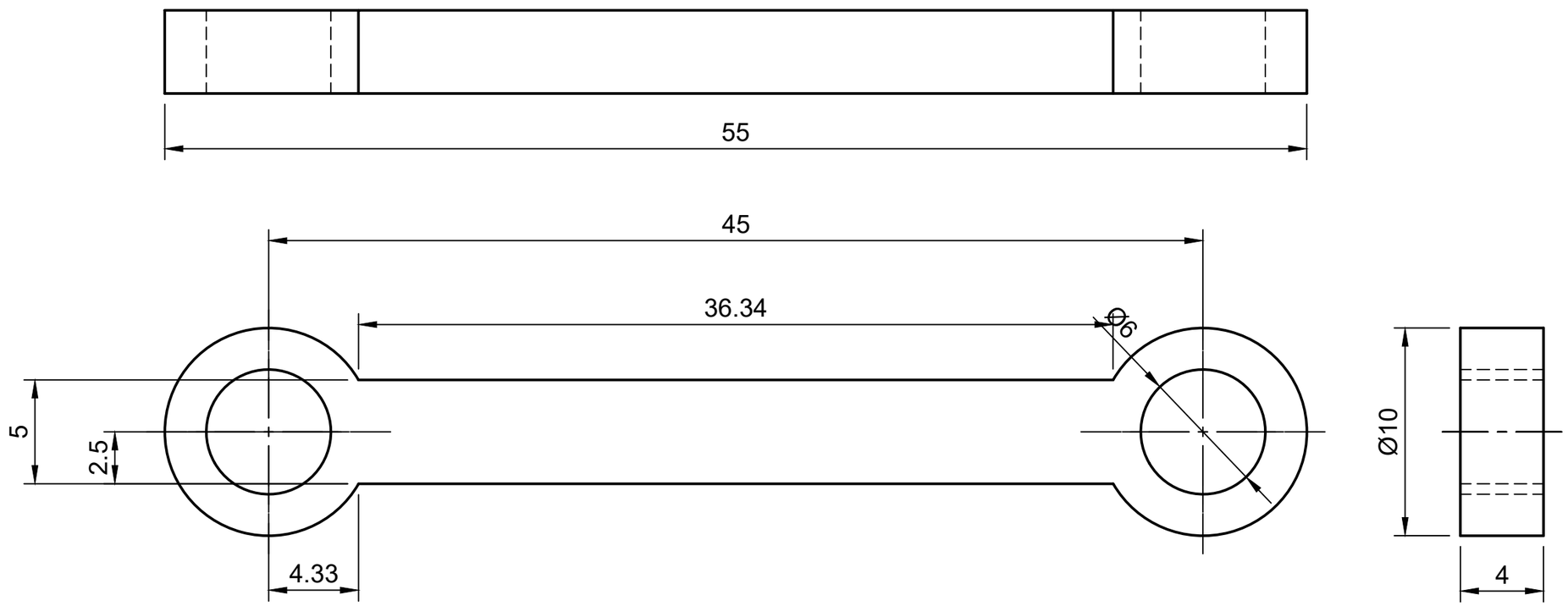

Dept.	Technical reference	Created by IYYAPPAN S 12-03-2026	Approved by
		Document type	Document status
		Title EXP-6.1	DWG No.
			Rev. / Date of issue / Sheet 3/7

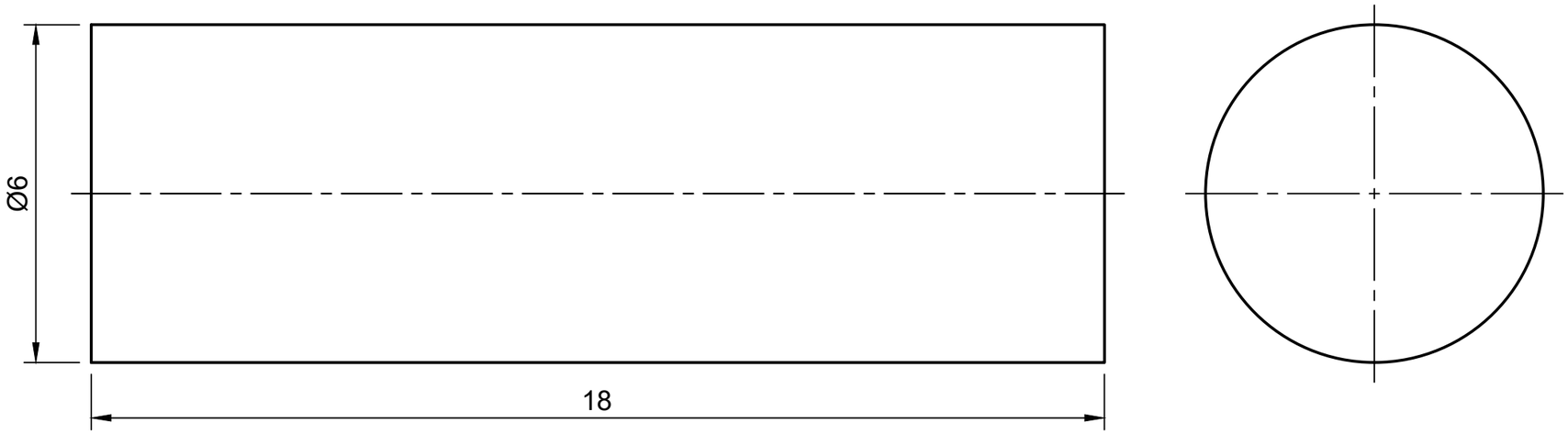

Dept.	Technical reference	Created by	Approved by
		IYYAPPAN S 12-03-2026	
		Document type	Document status
		Title EXP-6.1	DWG No.
			Rev. / Date of issue / Sheet 4/7

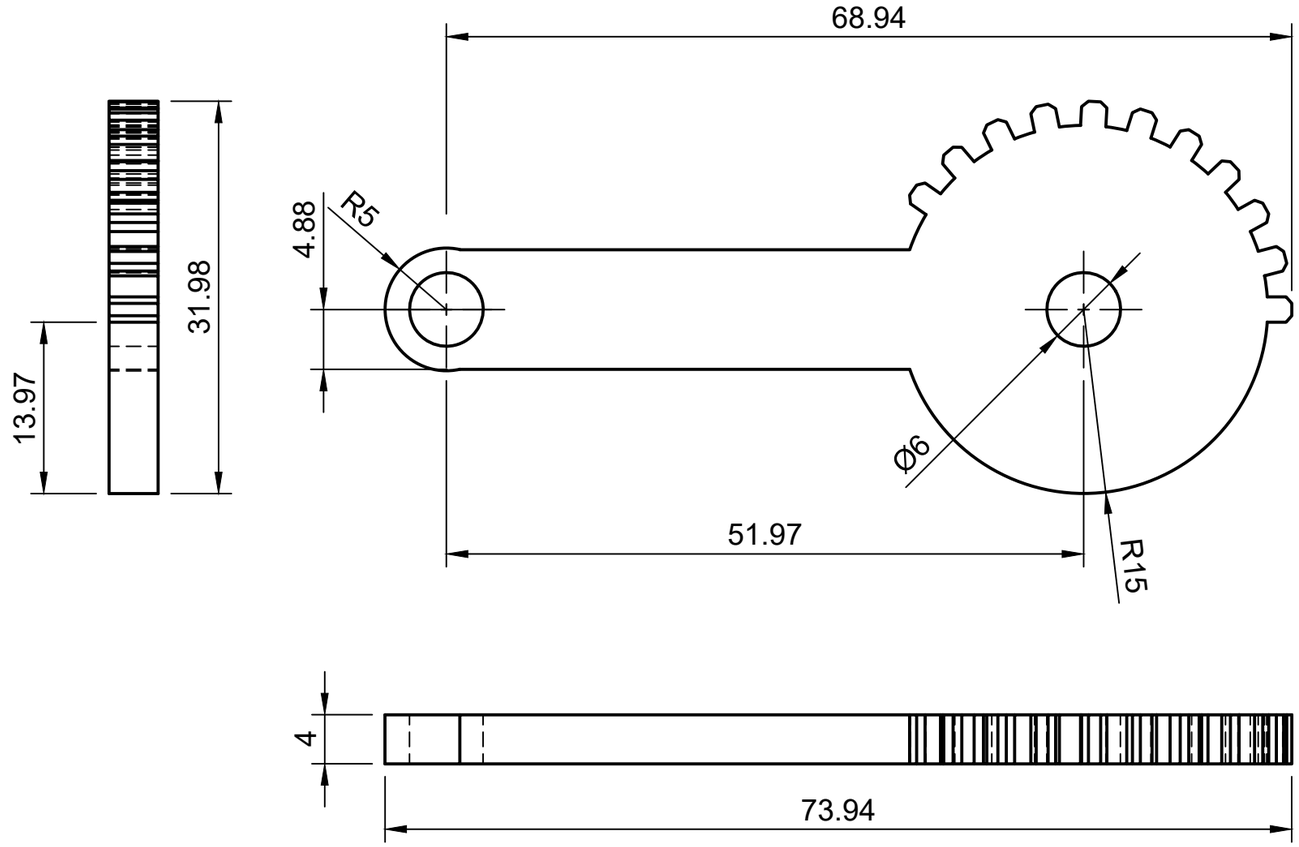

Dept.	Technical reference	Created by IYYAPPAN S 12-03-2026	Approved by
		Document type	Document status
		Title EXP-6.1	DWG No.
			Rev. / Date of issue / Sheet 5/7

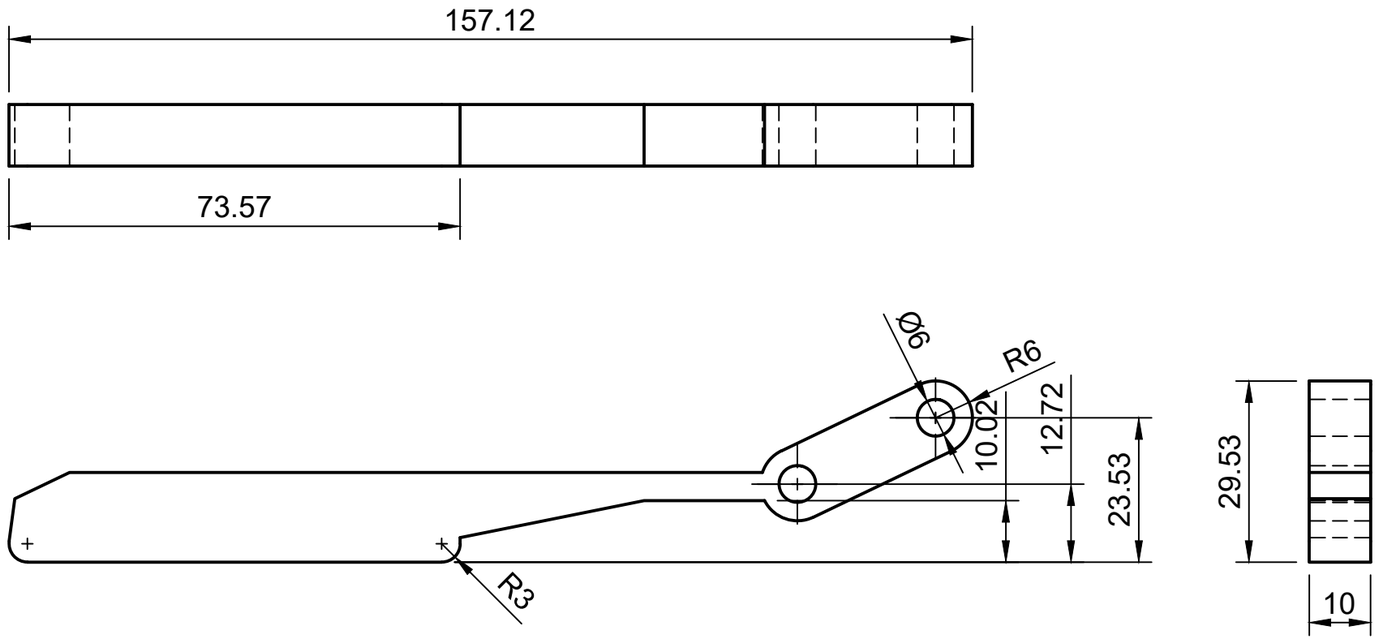

Dept.	Technical reference	Created by IYYAPPAN S 12-03-2026	Approved by
		Document type	Document status
		Title EXP-6.1	DWG No.
			Rev. / Date of issue / Sheet 6/7

Dept.	Technical reference	Created by IYYAPPAN S 12-03-2026	Approved by
		Document type	Document status
		Title EXP-6.1	DWG No.
			Rev. / Date of issue / Sheet 7/7